msz tools
kompetente Spann- und Automationstechnik
Exklusiv-Vertrieb: msz-tools GmbH & Co. KG,
Höhenweg 4a, D-87437 Kempten, Germany
Tel. +49-(0)831 5707822, Fax +49-(0)831 5707824
info@msz-tools.de, www.msz-tools.de

# H 160

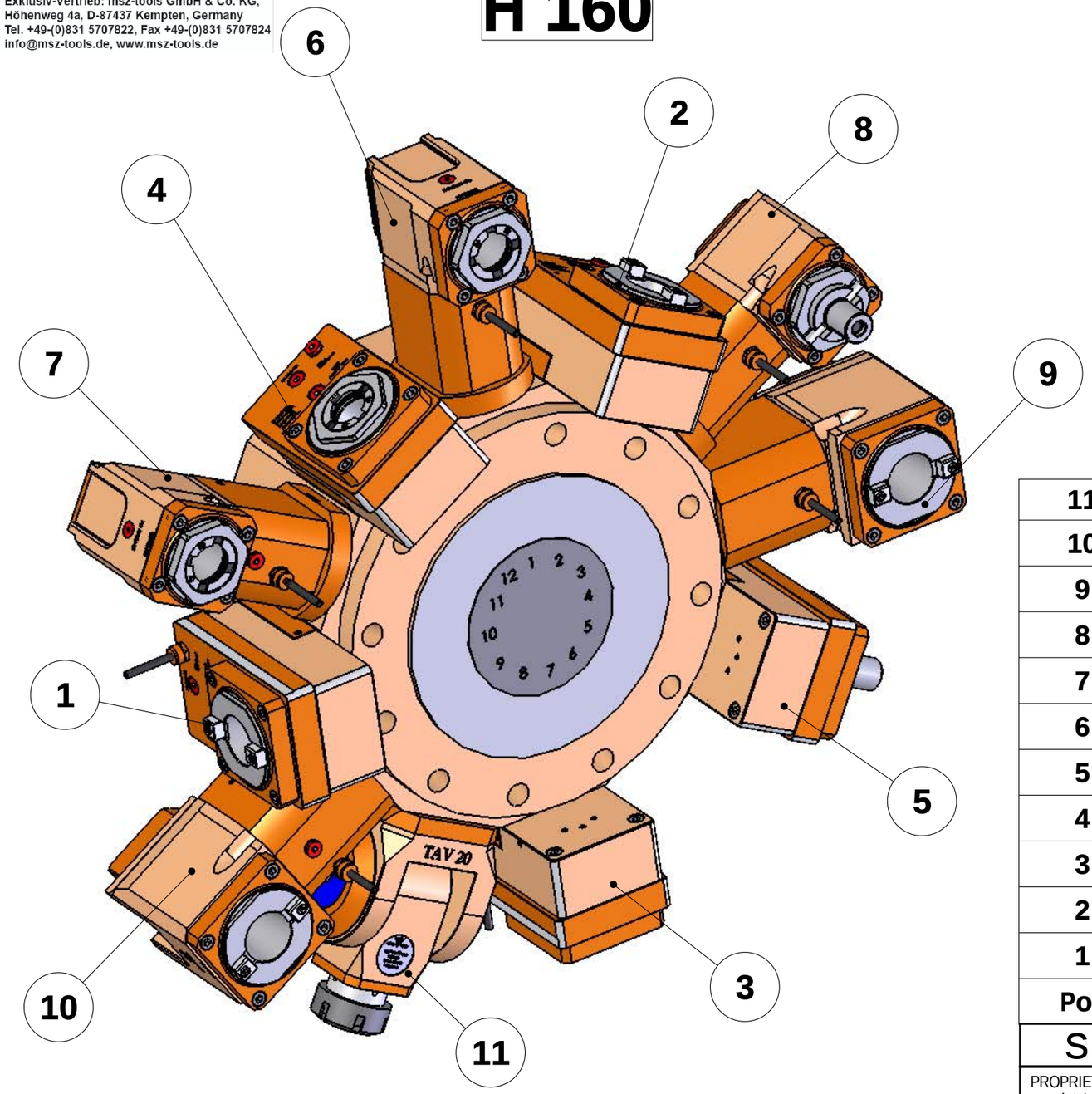


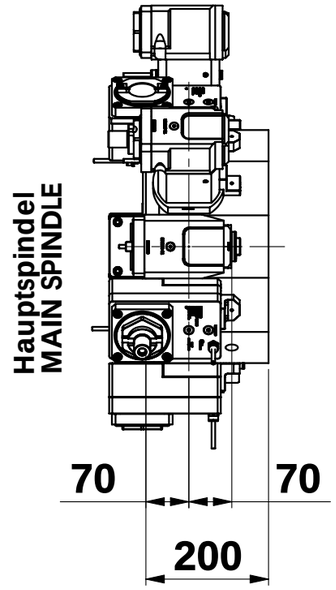


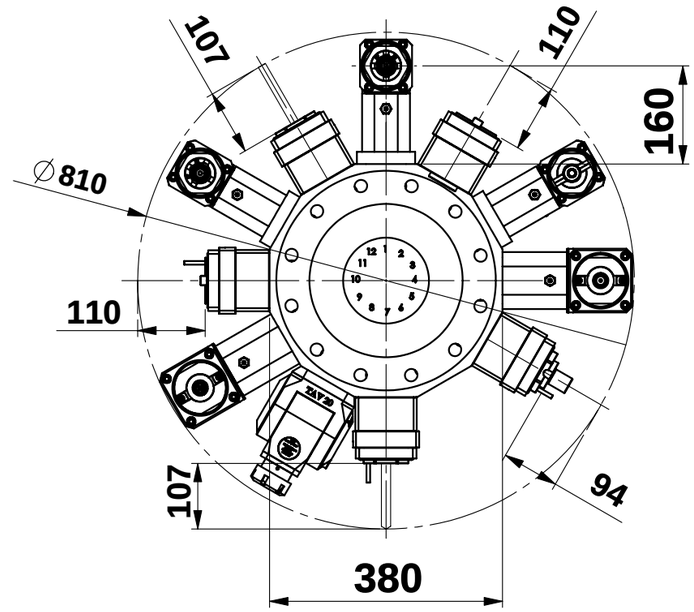


| Pos. | Artikel / Beschreibung | Menge | Bestell-Nr. |
|---|---|---|---|
| 11 | LT-T VDI50 ER40 H75-200 MZ | 1 | 05059900-R011 |
| 10 | LT-A VDI50 ISO-BT40 L RFH160MZ | 1 | 05059300-R011 |
| 9 | LT-A VDI50 ISO-BT40 L H160 MZ | 1 | 05059200-R011 |
| 8 | LT-A VDI50 DIN138-27 L H160 MZ | 1 | 05054400-R011 |
| 7 | LT-A VDI50 ER40F L RF H160 MZ | 1 | 05054200-R011 |
| 6 | LT-A VDI50 ER40F L H160 MZ | 1 | 05054100-R011 |
| 5 | LT-S VDI50 DIN27 OFS76 H121 MZ | 1 | 05054700-R011 |
| 4 | LT-S VDI50 ER40F OFS76RFH108MZ | 1 | 05054600-R011 |
| 3 | LT-S VDI50 ER40F OFS76 H108MZ | 1 | 05054500-R011 |
| 2 | LTS VDI50ISOBT40 OFS76RFH105MZ | 1 | 05059100-R011 |
| 1 | LT-S VDI50 ISOBT40 OFS76H105MZ | 1 | 05054900-R011 |

## L = Hauptspindel / MAIN SPINDLE

**MAZAK**
**NEXUS 300M-350M-450M**
**SQT 28-30**

**Revolver MAZAK**
**VDI-50**
**12 Plätze**

SMW AUTOBLOK GROUP

PROPRIETA' RISERVATA - Il presente disegno e' di proprieta' della MARIO PINTO SpA e non potra' essere comunicato a terzi o riprodotto in tutto o in parte senza il consenso scritto della stessa.

NOTICE - This drawing is property of MARIO PINTO SpA ITALY and shall not be reproduced, duplicated or copied in whole or in part, nor shall it be released to others without the written permission of the owner.

Diese Zeichnung darf ohne schrift_ liche Genehmigung von MARIO PINTO SpA ITALIEN weder kopiert noch dritten Personen mitgeteilt werden

MARIO PINTO
TORINO
MARIO PINTO S.p.A.

Revolver für Angetriebene Werkzeuge
**"MAZAK"** VDI-50
12 Plätze

**MAZAK**

| N. | REVISED/MODIFICA | DATA | FIRMA |
|---|---|---|---|
| A | AGGIORNATO | 22-11-06 | IANNUZZI |

| SCALE/SCALA | DATE/DATA | DRAWN BY/DISEGN. | CHECKED/VISTO |
|---|---|---|---|
| A3 1:10 | 12-06-2007 | TORAZZA | |

WEIGHT/PESO
Raw Greggio
Machined Finito 247.215 Kg

THE COMPANY GUARDS ITS DRAWINGS ACCORDING TO THE LAW

ASSEMBLY/COMPLESS. 5010 8404
DRAWING/DISEGNO **5010 8404**

Z:\disegni\Tabelle5010\DA 5010 8364 A 8464\5010 8404 - MZ 300-350 VDI50\